H10-TSRX-1000N-DO-M8-3QD

Ultra-Miniature Photoelectric

Thru-Beam Receiver Side View

Note: The product images shown may change over time as products are updated.

Dimensions

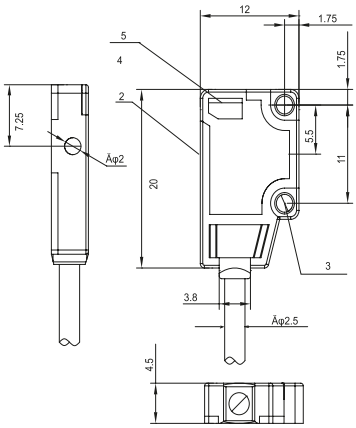

1	Emitter optic axis
2	Receiver optic axis
3	Mounting hole φ2mm
4	Green LED: power on
5	Red LED: on/off
6	Connection: 2m cable

Part Number

H10-TSRX-1000N-DO-M8-3QD

Features

Photoelectric sensors are used in virtually any manufacturing process with moving parts to detect products, machine parts, and a wide variety of moving objects.

For additional information, contact HTM Sensors at 800-644-1756 or service@htmsensors.com

Connection

NPN Dark-On

1 - Brown
3 - Blue
4 - Black

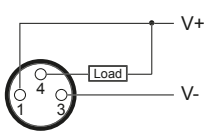

Technical Data

Light Source	-
Light Spot Size	-
Indicator LEDs	Output: Red Power: Green
IO-Link	No
Suppy Voltage	10-30 V DC
Max. Load Current	<= 50 mA
No Load Current	<= 20 mA
Short Circuit Protection	Yes
Reverse Polarity Protection	Yes
Output Type	NPN
Operation Mode	Dark On
Response Time 1	<=2ms
Senstivity Adjustment	-
Housing Material	PC+PBT
Lens Material	PC
IP Rating	IP67
Timer Options	-
Ambient Operating Temperature	-10 C to +55 C
Vibration Resistance	IEC 60947-5-2
Shock Resistance	IEC 60947-5-2
Cable or Connector	3-Pin M8 Male Pigtail 0.3 m

HTM SENSORS 1 YEAR WARRANTY

HTM SENSORS

In the USA: 1889 Maryland Ave., Niagara Falls, NY 14305
In Canada: 3419 Mainway, Burlington, ON L7M 1A9
Toll Free: 1-800-644-1756 • Fax: 888-283-2127
service@htmsensors.com